Mold #271 Pieces

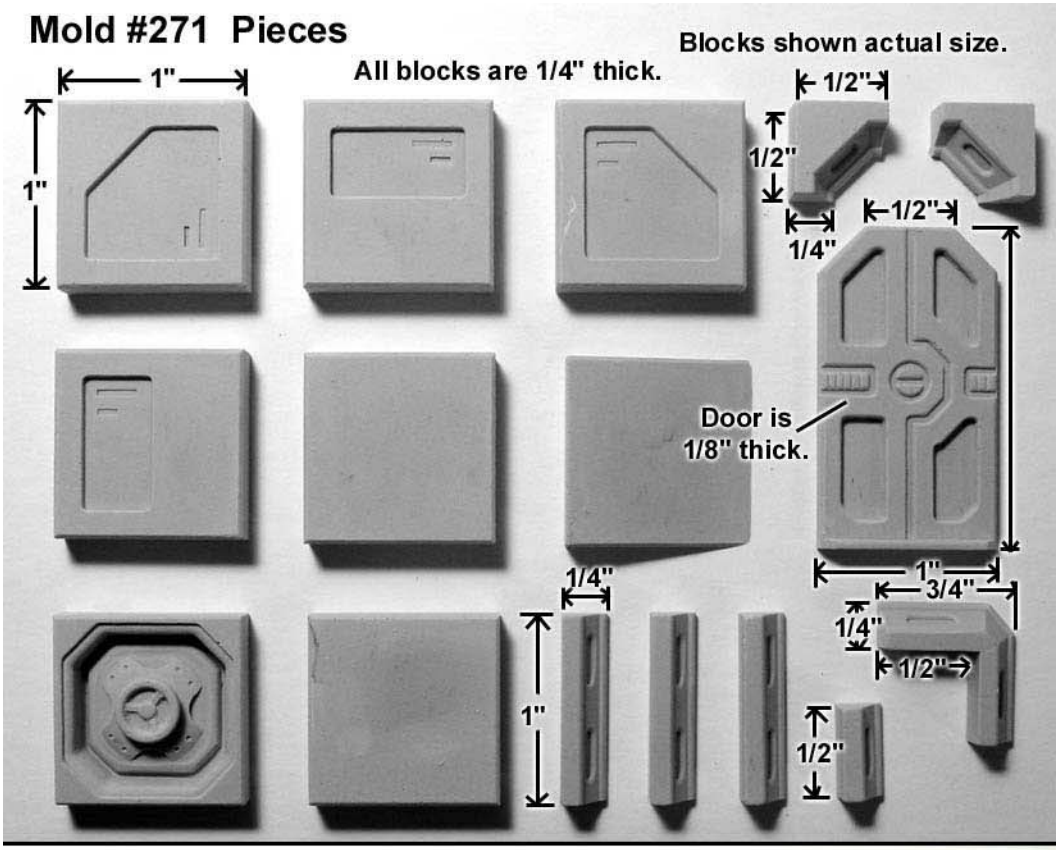
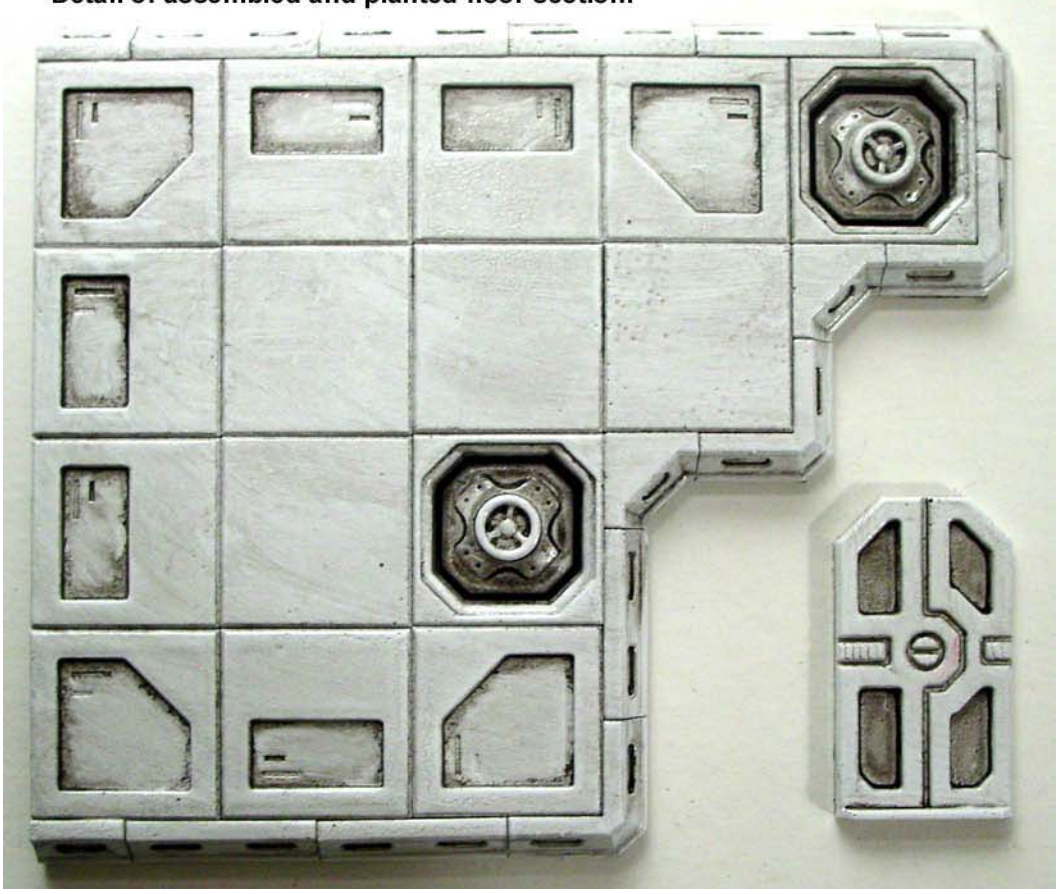
Detail of assembled and pianted floor section.